Würth Elektronik eiSos GmbH & Co. KG
EMC & Inductive Solutions
Max-Eyth-Straße 1 · 74638 Waldenburg · Germany
Tel. +49 7942 945-0 · Fax +49 7942 945-5000
eiSos@we-online.de · www.we-online.de

User guide

Dual DC AN 9kHz – 200MHz
5µH || 50Ω

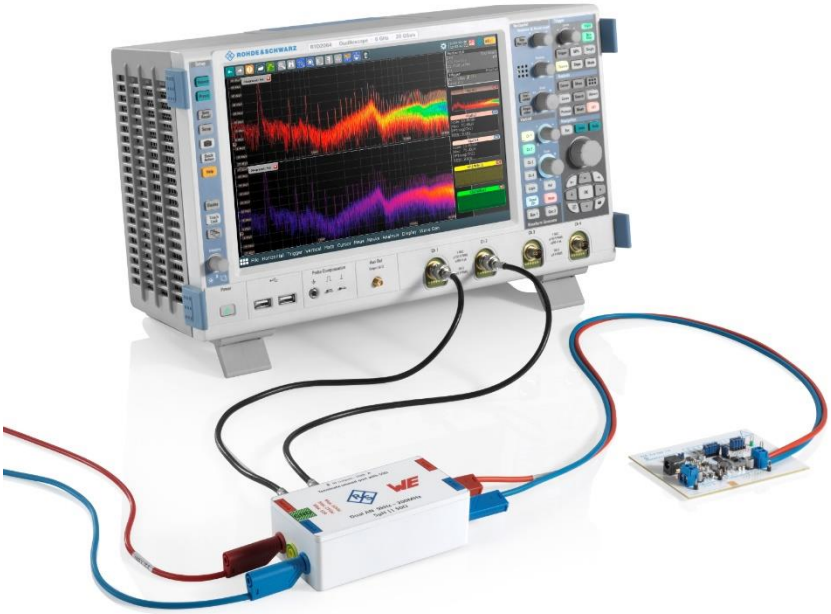

Würth Elektronik eiSos GmbH & Co. KG Sitz Waldenburg, Registergericht Stuttgart HRA 580801
Komplementär Würth Elektronik eiSos Verwaltungs-GmbH, Sitz Waldenburg, Registergericht Stuttgart HRB 581033
Geschäftsführer Thomas Schrott, Alexander Gerfer, Thomas Wild, Dirk Knorr, Josef Wörner
Bankverbindung UniCredit Bank AG Stuttgart, Konto 322 620 136, BLZ 600 202 90, IBAN DE86 6002 0290 0322 6201 36, SWIFT/BIC HYVEDEMM473 · **USt.-IdNr.** DE220618976

Würth Elektronik eiSos GmbH & Co. KG
EMC & Inductive Solutions
Max-Eyth-Straße 1 · 74638 Waldenburg · Germany
Tel. +49 7942 945-0 · Fax +49 7942 945-5000
eiSos@we-online.de · www.we-online.de

Content

Measurement description 3
Transmission behavior 4
Impedance 5
Safety arrangements 6
Essential safety instructions 7
Guarantee 8
Technical characteristics 9
Shipment 9

Würth Elektronik eiSos GmbH & Co. KG Sitz Waldenburg, Registergericht Stuttgart HRA 580801
Komplementär Würth Elektronik eiSos Verwaltungs-GmbH, Sitz Waldenburg, Registergericht Stuttgart HRB 581033
Geschäftsführer Thomas Schrott, Alexander Gerfer, Thomas Wild, Dirk Knorr, Josef Wörner
Bankverbindung UniCredit Bank AG Stuttgart, Konto 322 620 136, BLZ 600 202 90, IBAN DE86 6002 0290 0322 6201 36, SWIFT/BIC HYVEDEMM473 · **USt.-IdNr.** DE220618976

Würth Elektronik eiSos GmbH & Co. KG
EMC & Inductive Solutions
Max-Eyth-Straße 1 · 74638 Waldenburg · Germany
Tel. +49 7942 945-0 · Fax +49 7942 945-5000
eiSos@we-online.de · www.we-online.de

WÜRTH ELEKTRONIK

Measurement description

The network simulation “dual DC LISN” is used to measure the conducted interference emissions of a test object in the frequency range of 9kHz up to 200MHz. The device based on the CISPR 25 / ISO 7637 standard for automotive electrical systems. It measures the RF interferences on both channels of such systems by using blocking inductance of 5µH.

The measurement should do in following steps:

- DUT (device under test) and LISN placed on a conducted plane
- LISN inserted between power supply and DUT
- DUT connection should be not more than 50cm and straight above the plane
- Connect RF output A to analyzer for measuring the differential mode noise from positive line or to output B to analyze the negative line
- For measuring the common mode noise additional hardware is needed

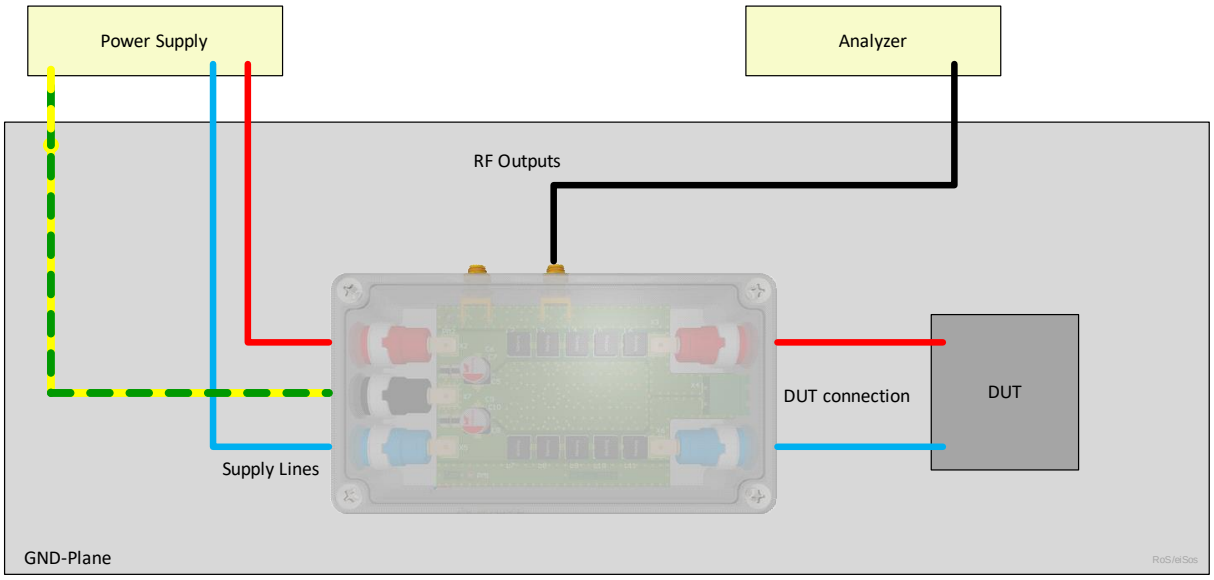

Würth Elektronik eiSos GmbH & Co. KG Sitz Waldenburg, Registergericht Stuttgart HRA 580801
Komplementär Würth Elektronik eiSos Verwaltungs-GmbH, Sitz Waldenburg, Registergericht Stuttgart HRB 581033
Geschäftsführer Thomas Schrott, Alexander Gerfer, Thomas Wild, Dirk Knorr, Josef Wörner
Bankverbindung UniCredit Bank AG Stuttgart, Konto 322 620 136, BLZ 600 202 90, IBAN DE86 6002 0290 0322 6201 36, SWIFT/BIC HYVEDEMM473 · **USt.-IdNr.** DE220618976

Würth Elektronik eiSos GmbH & Co. KG
EMC & Inductive Solutions
Max-Eyth-Straße 1 · 74638 Waldenburg · Germany
Tel. +49 7942 945-0 · Fax +49 7942 945-5000
eiSos@we-online.de · www.we-online.de

Transmission behavior

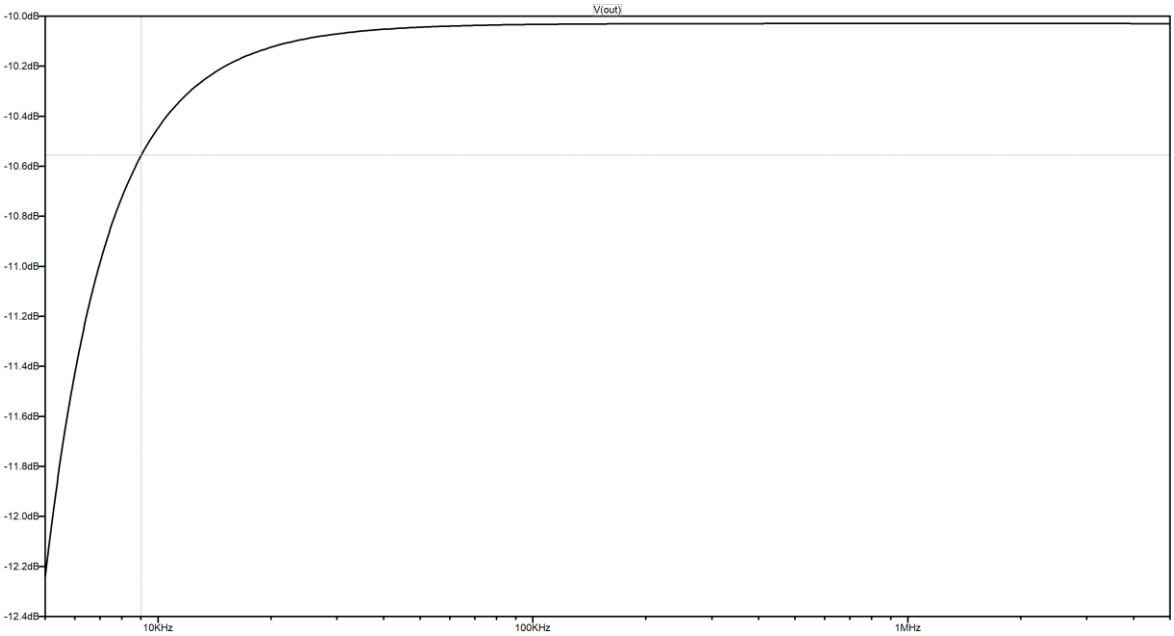

Simulation of signal path from DUT port to RF output (positive and negative) in frequency range of 5kHz – 5MHz.

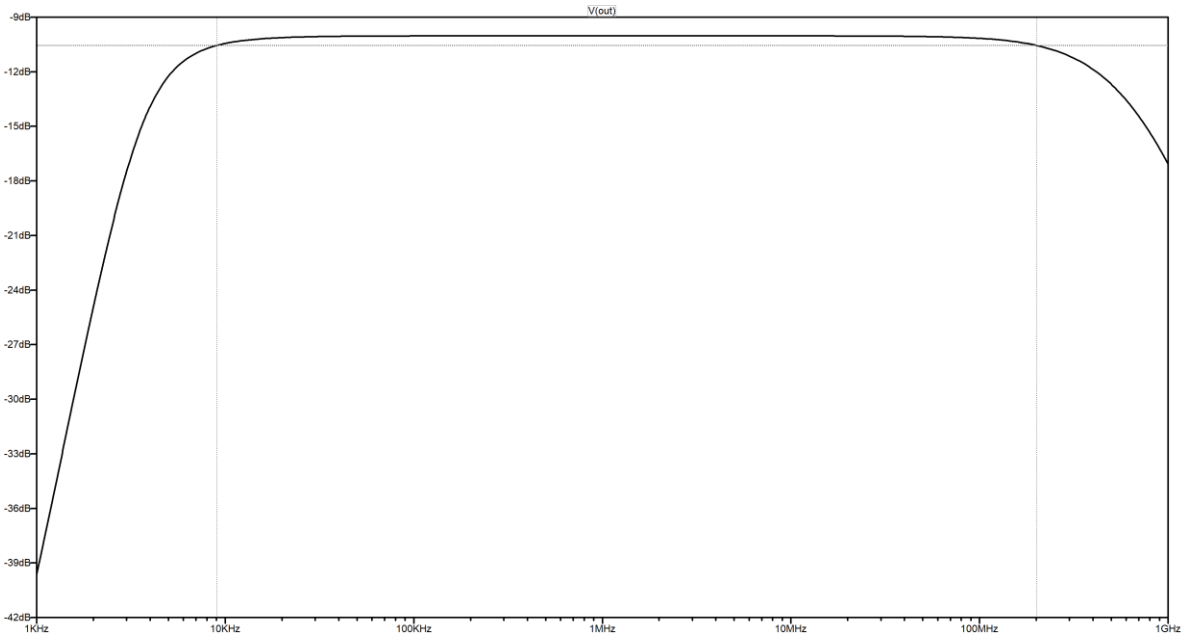

Simulation of signal path from DUT port to RF output (positive and negative) in frequency range of 1kHz – 1GHz. Marker from 9kHz – 200MHz attenuation -10 dB with max. tolerance -0,55 dB.

Würth Elektronik eiSos GmbH & Co. KG Sitz Waldenburg, Registergericht Stuttgart HRA 580801
Komplementär Würth Elektronik eiSos Verwaltungs-GmbH, Sitz Waldenburg, Registergericht Stuttgart HRB 581033
Geschäftsführer Thomas Schrott, Alexander Gerfer, Thomas Wild, Dirk Knorr, Josef Wörner
Bankverbindung UniCredit Bank AG Stuttgart, Konto 322 620 136, BLZ 600 202 90, IBAN DE86 6002 0290 0322 6201 36, SWIFT/BIC HYVEDEMM473 · **USt.-IdNr.** DE220618976

Würth Elektronik eiSos GmbH & Co. KG
EMC & Inductive Solutions
Max-Eyth-Straße 1 · 74638 Waldenburg · Germany
Tel. +49 7942 945-0 · Fax +49 7942 945-5000
eiSos@we-online.de · www.we-online.de

Impedance

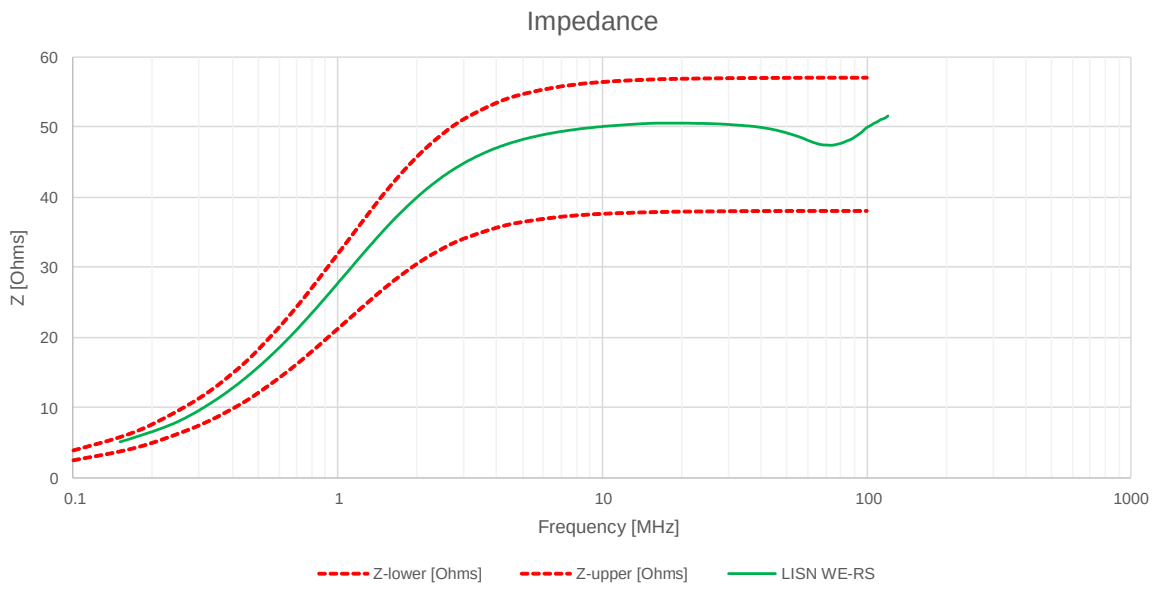

Impedance measurement of positive DUT port.

Würth Elektronik eiSos GmbH & Co. KG Sitz Waldenburg, Registergericht Stuttgart HRA 580801
Komplementär Würth Elektronik eiSos Verwaltungs-GmbH, Sitz Waldenburg, Registergericht Stuttgart HRB 581033
Geschäftsführer Thomas Schrott, Alexander Gerfer, Thomas Wild, Dirk Knorr, Josef Wörner
Bankverbindung UniCredit Bank AG Stuttgart, Konto 322 620 136, BLZ 600 202 90, IBAN DE86 6002 0290 0322 6201 36, SWIFT/BIC HYVEDEMM473 · **USt.-IdNr.** DE220618976

Würth Elektronik eiSos GmbH & Co. KG
EMC & Inductive Solutions
Max-Eyth-Straße 1 · 74638 Waldenburg · Germany
Tel. +49 7942 945-0 · Fax +49 7942 945-5000
eiSos@we-online.de · www.we-online.de

WÜRTH ELEKTRONIK

Safety arrangements

In case of using this documents and data to build this device for own usage, please keep in mind to save your own health.

- Read all documents
- Follow the safety instructions and warnings
- The device is only allowed to use for measurement applications that are specified. Other usage is forbidden.

Würth Elektronik eiSos GmbH & Co. KG Sitz Waldenburg, Registergericht Stuttgart HRA 580801
Komplementär Würth Elektronik eiSos Verwaltungs-GmbH, Sitz Waldenburg, Registergericht Stuttgart HRB 581033
Geschäftsführer Thomas Schrott, Alexander Gerfer, Thomas Wild, Dirk Knorr, Josef Wörner
Bankverbindung UniCredit Bank AG Stuttgart, Konto 322 620 136, BLZ 600 202 90, IBAN DE86 6002 0290 0322 6201 36, SWIFT/BIC HYVEDEMM473 · **USt.-IdNr.** DE220618976

Würth Elektronik eiSos GmbH & Co. KG
EMC & Inductive Solutions
Max-Eyth-Straße 1 · 74638 Waldenburg · Germany
Tel. +49 7942 945-0 · Fax +49 7942 945-5000
eiSos@we-online.de · www.we-online.de

WÜRTH ELEKTRONIK

Essential safety instructions

1. Please only use in inside rooms. For the power supply refer to the technical characteristics.
2. The product may only be used by authorized technical staff. The local or country-specific safety and accident prevention regulations must be observed for all work.
3. During operation of the product, function-related increased electromagnetic radiation and near fields can occur. Taking into account the increased need for protection of unborn life, pregnant women should be protected by suitable measures. People with pacemakers can also be at risk from electromagnetic radiation. The influence of electronic products outside of the operational EMC environment should be prevented by maintaining an appropriate safety distance or by using shielded rooms
4. Products / components must not be operated electrically, mechanically and / or thermally beyond their intended use.
5. To ensure proper operation, no changes may be made to the device.
6. Do not use the product under conditions in which condensation could or has occurred in or on the product, e.g. when the product has been moved from a cold to a warm environment.
7. Please only use neutral detergents for cleaning. Never use alcohol, benzene or thinner.

Würth Elektronik eiSos GmbH & Co. KG Sitz Waldenburg, Registergericht Stuttgart HRA 580801
Komplementär Würth Elektronik eiSos Verwaltungs-GmbH, Sitz Waldenburg, Registergericht Stuttgart HRB 581033
Geschäftsführer Thomas Schrott, Alexander Gerfer, Thomas Wild, Dirk Knorr, Josef Wörner
Bankverbindung UniCredit Bank AG Stuttgart, Konto 322 620 136, BLZ 600 202 90, IBAN DE86 6002 0290 0322 6201 36, SWIFT/BIC HYVEDEMM473 · **USt.-IdNr.** DE220618976

Würth Elektronik eiSos GmbH & Co. KG
EMC & Inductive Solutions
Max-Eyth-Straße 1 · 74638 Waldenburg · Germany
Tel. +49 7942 945-0 · Fax +49 7942 945-5000
eiSos@we-online.de · www.we-online.de

WÜRTH ELEKTRONIK

Guarantee

Würth Elektronik eiSos GmbH & Co. KG Sitz Waldenburg, Registergericht Stuttgart HRA 580801
Komplementär Würth Elektronik eiSos Verwaltungs-GmbH, Sitz Waldenburg, Registergericht Stuttgart HRB 581033
Geschäftsführer Thomas Schrott, Alexander Gerfer, Thomas Wild, Dirk Knorr, Josef Wörner
Bankverbindung UniCredit Bank AG Stuttgart, Konto 322 620 136, BLZ 600 202 90, IBAN DE86 6002 0290 0322 6201 36, SWIFT/BIC HYVEDEMM473 · **USt.-IdNr.** DE220618976

Würth Elektronik eiSos GmbH & Co. KG
EMC & Inductive Solutions
Max-Eyth-Straße 1 · 74638 Waldenburg · Germany
Tel. +49 7942 945-0 · Fax +49 7942 945-5000
eiSos@we-online.de · www.we-online.de

WÜRTH ELEKTRONIK

Technical characteristics

RF path

Channels: 2 (with clamping diodes)
Frequency range: 9kHz – 200MHz
Inductance: 5µH || 50 Ohm
Internal attenuation: 10 dB

DC path

Max. current: 10 ADC
Max. voltage: 60 VDC
DC resistance: 2x20mOhm

Size: 121mm x 66mm x 35mm (excluding connectors)

Shipment

This User guide
Technical documentation consists of:

- Schematic
- Bill of material
- Assembly drawing
- Assembly instruction
- Drilling plan for housing
- Pick and place file
- Gerber files

Würth Elektronik eiSos GmbH & Co. KG Sitz Waldenburg, Registergericht Stuttgart HRA 580801
Komplementär Würth Elektronik eiSos Verwaltungs-GmbH, Sitz Waldenburg, Registergericht Stuttgart HRB 581033
Geschäftsführer Thomas Schrott, Alexander Gerfer, Thomas Wild, Dirk Knorr, Josef Wörner
Bankverbindung UniCredit Bank AG Stuttgart, Konto 322 620 136, BLZ 600 202 90, IBAN DE86 6002 0290 0322 6201 36, SWIFT/BIC HYVEDEMM473 · **USt.-IdNr.** DE220618976